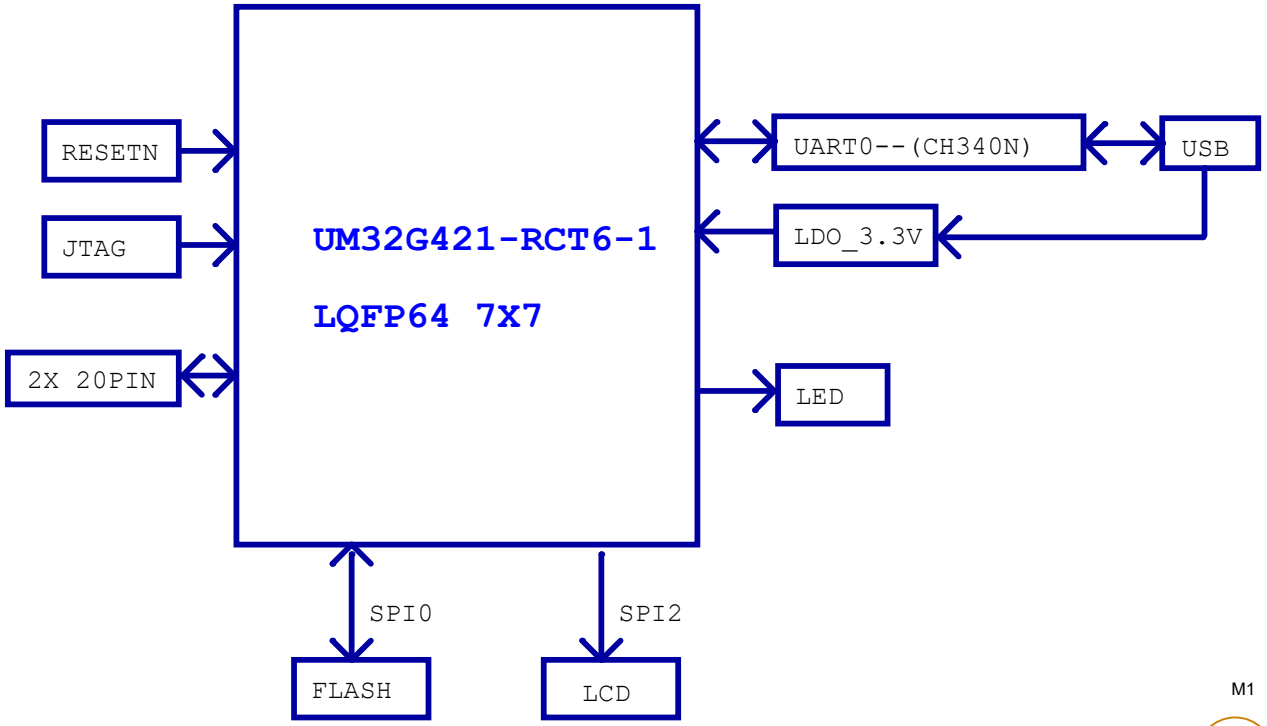

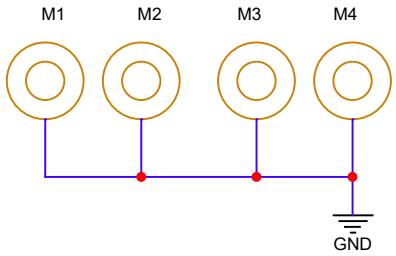

Unicmicro(Guangzhou)Co.,Ltd.			
Project:	UM32G421_EVB_LQFP64_7X7_SCH_V01_20240412		
Page:	01. BLOCK DIAGRAM		
Date:	Tuesday, April 16, 2024	Rev:	V01
Designed by:	CIMI	Sheet:	1 of 4

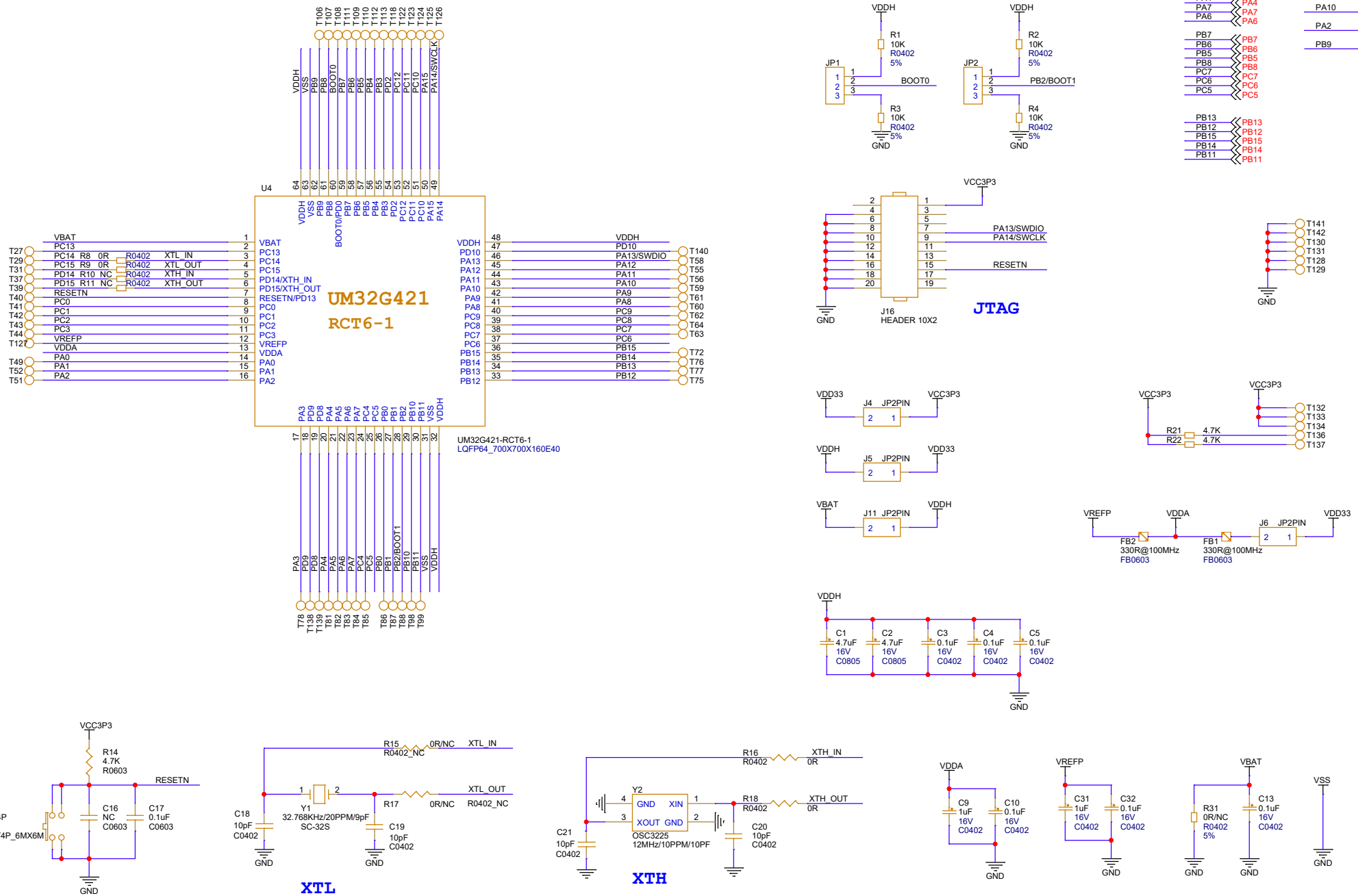
U4
UM32G421
RCT6-1
UM32G421-RCT6-1
LQFP64_700X700X160E40
JP1
JP2
BOOT0
PB2/BOOT1
R1 10K R0402 5%
R2 10K R0402 5%
R3 10K R0402 5%
R4 10K R0402 5%
GND
VDDH
VCC3P3
JTAG
J16
HEADER 10X2
PA13/SWDIO
PA14/SWCLK
RESETN
J4 JP2PIN
J5 JP2PIN
J11 JP2PIN
J6 JP2PIN
VDD33
VBAT
VREFP
VDDA
R21 4.7K
R22 4.7K
FB2 330R@100MHz FB0603
FB1 330R@100MHz FB0603
C1 4.7uF 16V C0805
C2 4.7uF 16V C0805
C3 0.1uF 16V C0402
C4 0.1uF 16V C0402
C5 0.1uF 16V C0402
R14 4.7K R0603
SW4P
SW1
SMT4_6MX6M
C16 NC C0603
C17 0.1uF C0603
XTL
R15 0R/NC R0402_NC
XTL_IN
XTL_OUT
R17 0R/NC R0402_NC
Y1 32.768KHz/20PPM/9pF SC-32S
C18 10pF C0402
C19 10pF C0402
XTH
R16 R0402 XTH_IN 0R
R18 R0402 XTH_OUT 0R
Y2 OSC3225 12MHz/10PPM/10PF
C20 10pF C0402
C21 10pF C0402
C9 1uF 16V C0402
C10 0.1uF 16V C0402
C31 1uF 16V C0402
C32 0.1uF 16V C0402
R31 0R/NC R0402 5%
C13 0.1uF 16V C0402
VSS
Unicmicro(Guangzhou)Co.,Ltd.
Project: UM32G421_EVB_LQFP64_7X7_SCH_V01_20240412
Page: 02. UM32G421
Date: Wednesday, April 17, 2024
Rev: V01
Designed by: CIMI
Sheet: 2 of 4

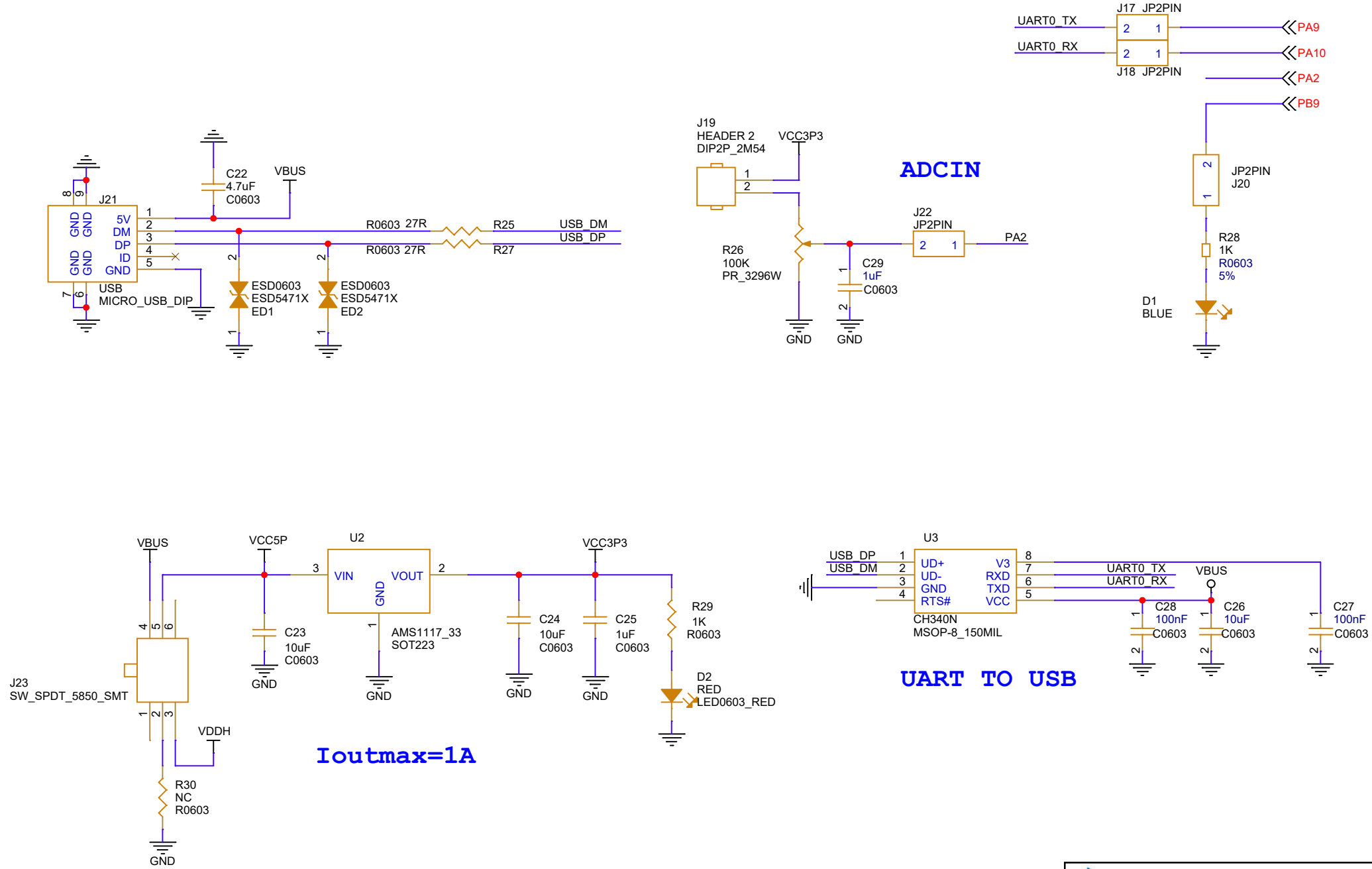

Unicmicro(Guangzhou)Co.,Ltd.			
Project:	UM32G421_EVB_LQFP64_7X7_SCH_V01_20240412		
Page:	03. USB TO UART		
Date:	Tuesday, April 16, 2024	Rev:	V01
Designed by:	CIMI	Sheet:	3 of 4

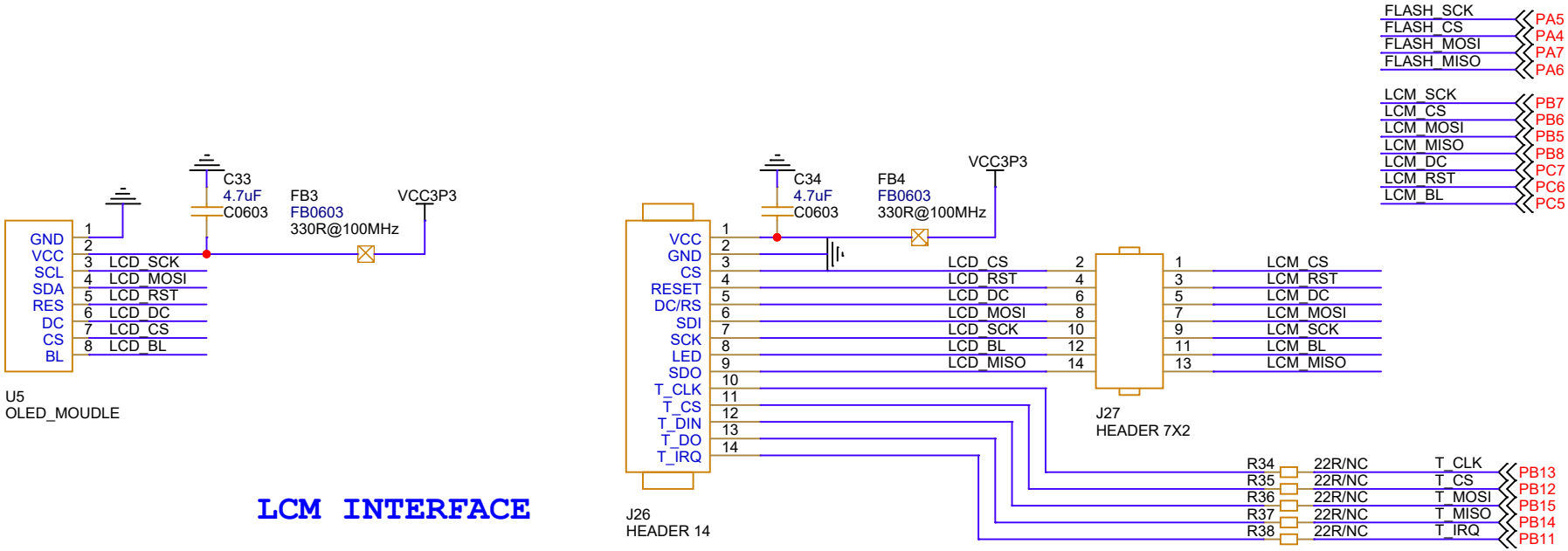

LCM INTERFACE

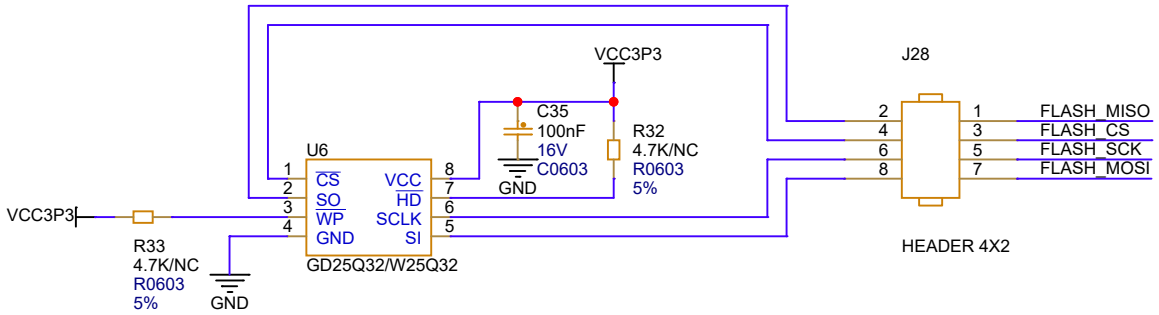

SPI FLASH

Unicmicro(Guangzhou)Co.,Ltd.			
Project:	UM32G421_EVB_LQFP64_7X7_SCH_V01_20240412		
Page:	03. USB TO UART		
Date:	Wednesday, April 17, 2024	Rev:	V01
Designed by:	CIMI	Sheet:	4 of 4