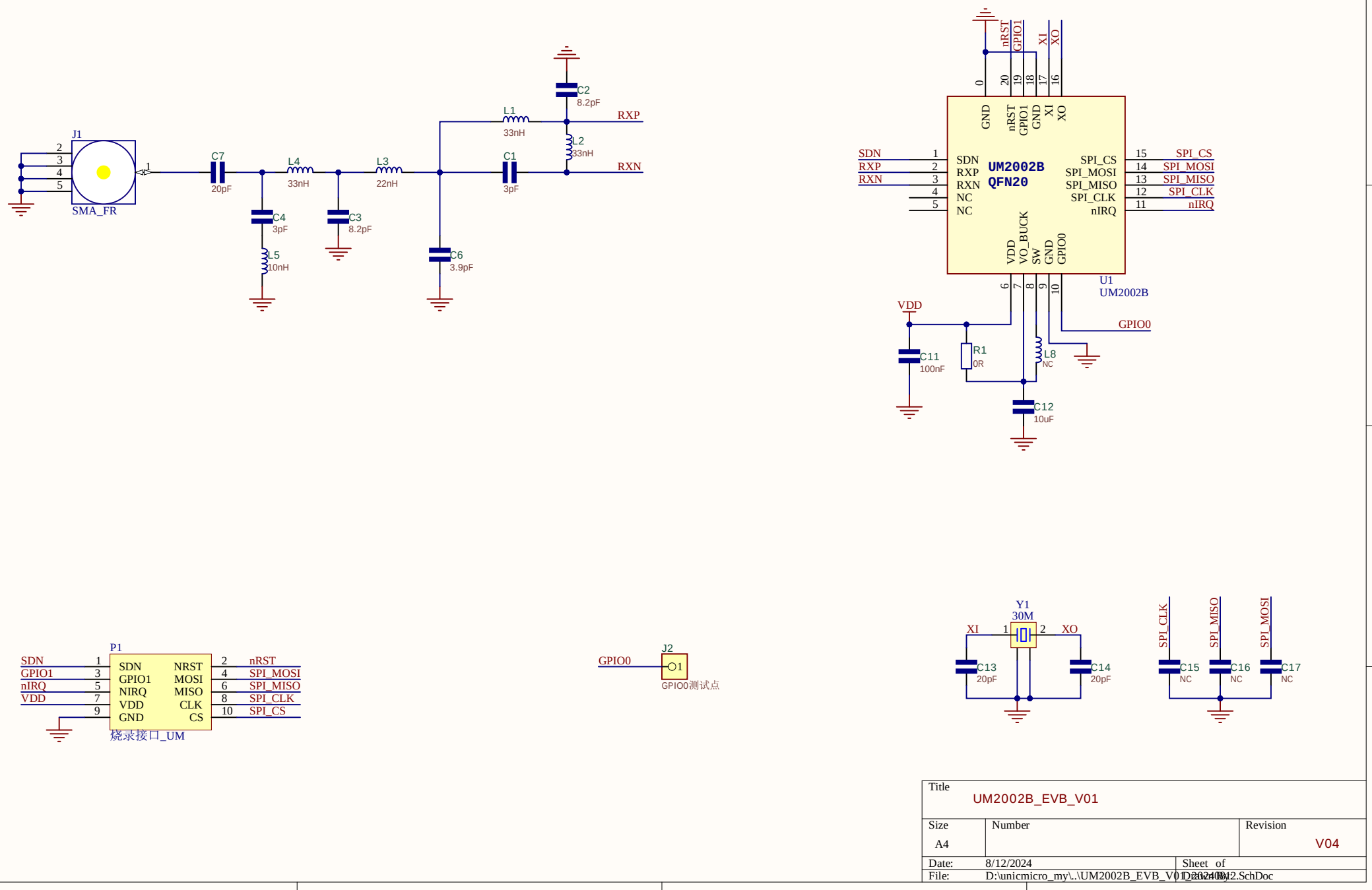

Title	UM2002B_EVB_V01	
Size: A4	Number:	Revision: V04
Date: 8/12/2024	Sheet of	
File: D:\unicmicro_my\..\UM2002B_EVB_V01_20240812.SchDoc		