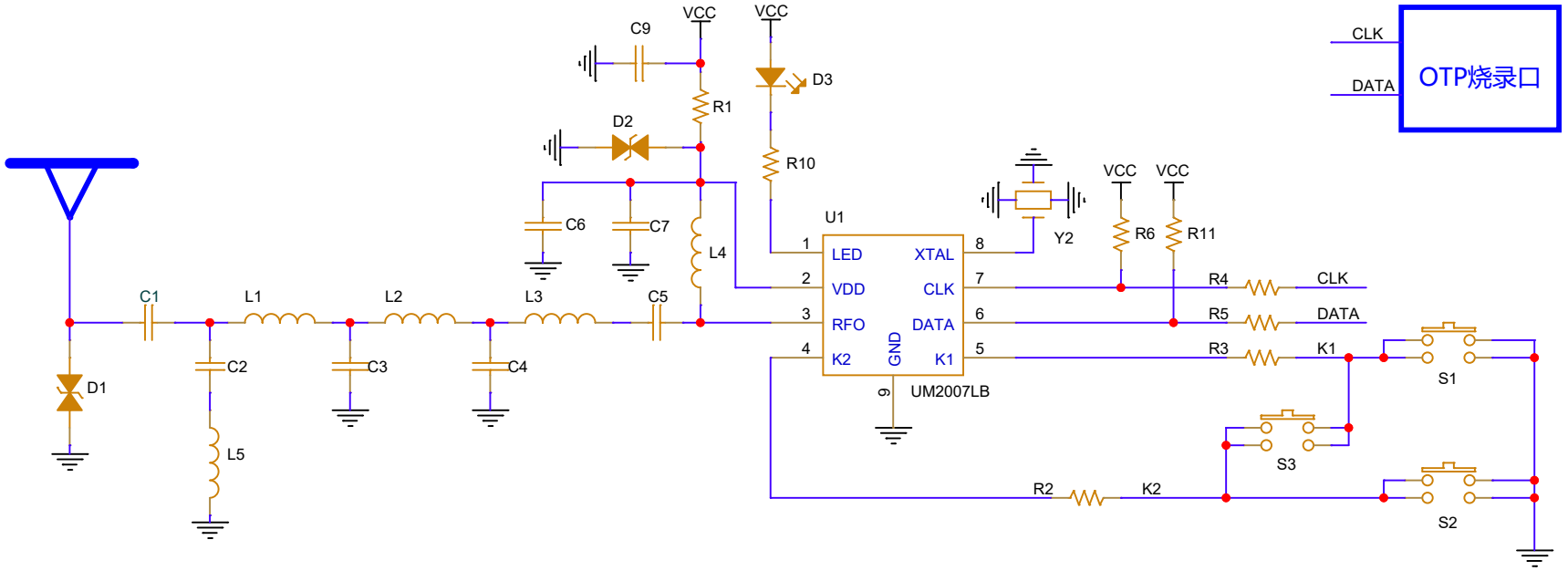

Unicmicro(Guangzhou)Co.,Ltd.			
Project:	**UM2007L_EVB_V01_M1**		
Page:	**MAIN**		
Date:	Thursday, March 05, 2026	Rev:	V01
Designed by:	CIMI	Sheet:	1 of 1